Outline Drawing

客户确认签名 Customer approved		日期 Date	

VER	REVISION RECORD	Date	Name
A	NEW RELEASE	2020/06/15	zxp
B			
C			

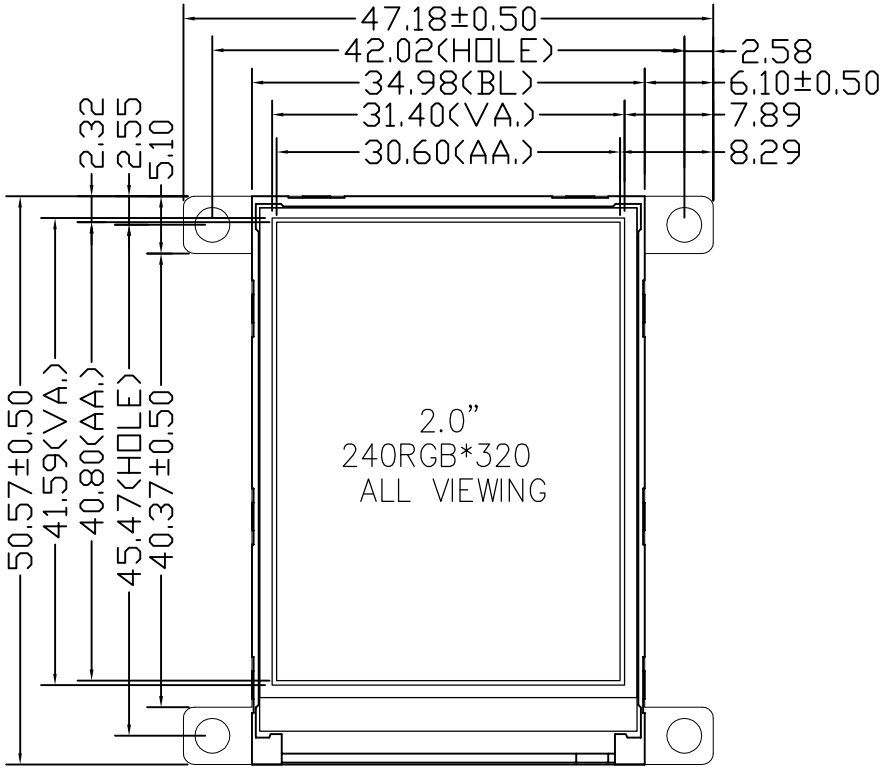

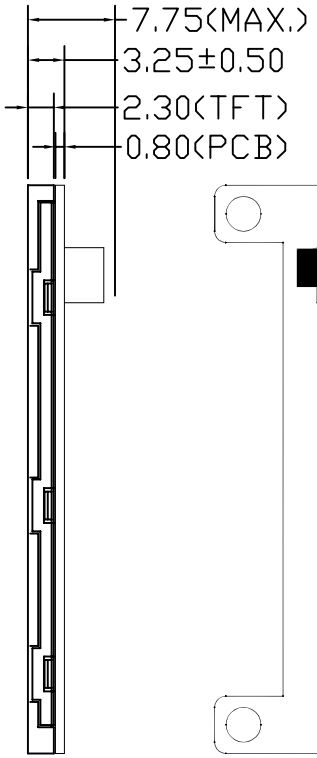

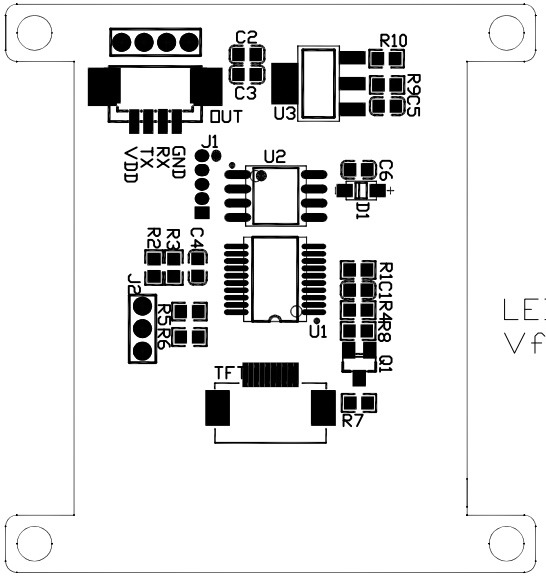

PIN DEFINE

PIN NO.	SYMBOL
1	GND
2	RX
3	TX
4	VDD

LED CIRCUIT DIAGRAM
Vf=2.7~3.0V(If=60mA)

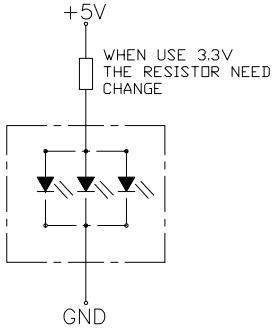

NOTE

1.Lcd Display Type: 2.0' SMART UART TFT LCM,240*320
2.Polarzier Mode:Transmissive,normally white
3.Viewing Direction: ALL
4.Logic Supply Voltage: 5.0V OR 3.3V
5.Control IC:
6.Backlignt: White
7.Backlight brightness and uniformity: 220cd/m2,>=80%
8.Operating Temp: -10 TO 60℃
9.Storage Temp：-20 TO 70℃
10.Connector:
11.Ulteriorly Tolerance:±0.2MM

E.V.T	深圳市隼目显示技术科技有限公司 Shenzhen Eagle Vision Display Technology Co., Ltd			LCM TYPE 2.0吋串口TFT
Dwg:		CUSTOMER		Material No.
Check:		MODULE	LMT020U4NT01	SCALE: 1:1
Dim: MM		Visual Angle		SHEET 1 OF 1

由 Autodesk 教育版产品制作